Fluidmaster®

A GLOBAL FAMILY OF BRANDS

WISA® LIV SCHWAB
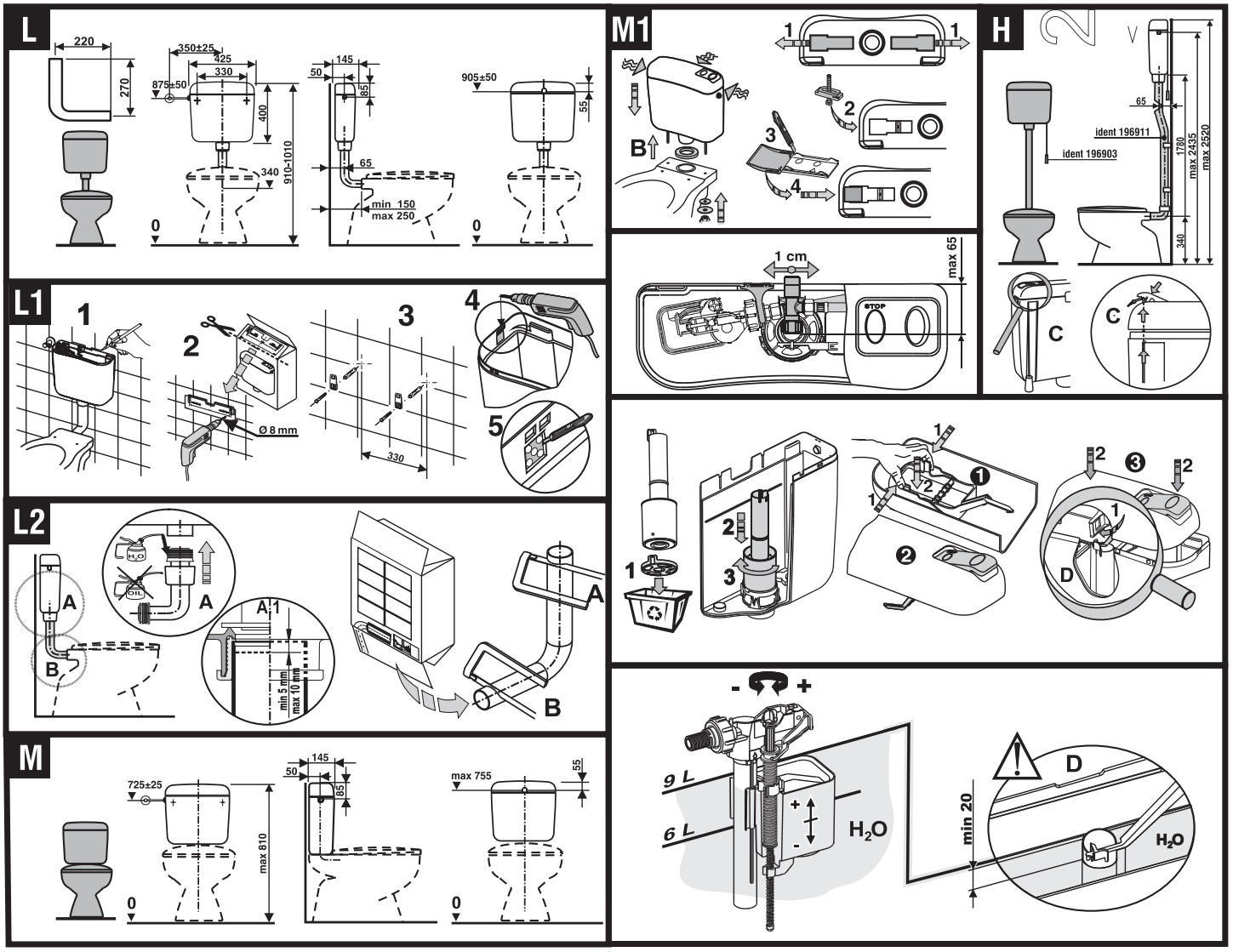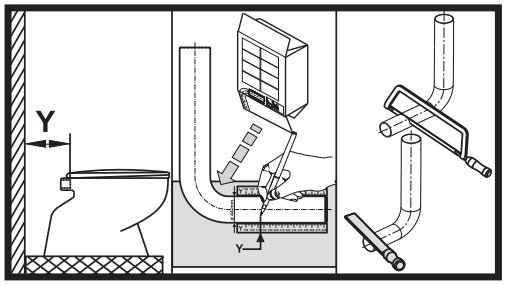
VISION