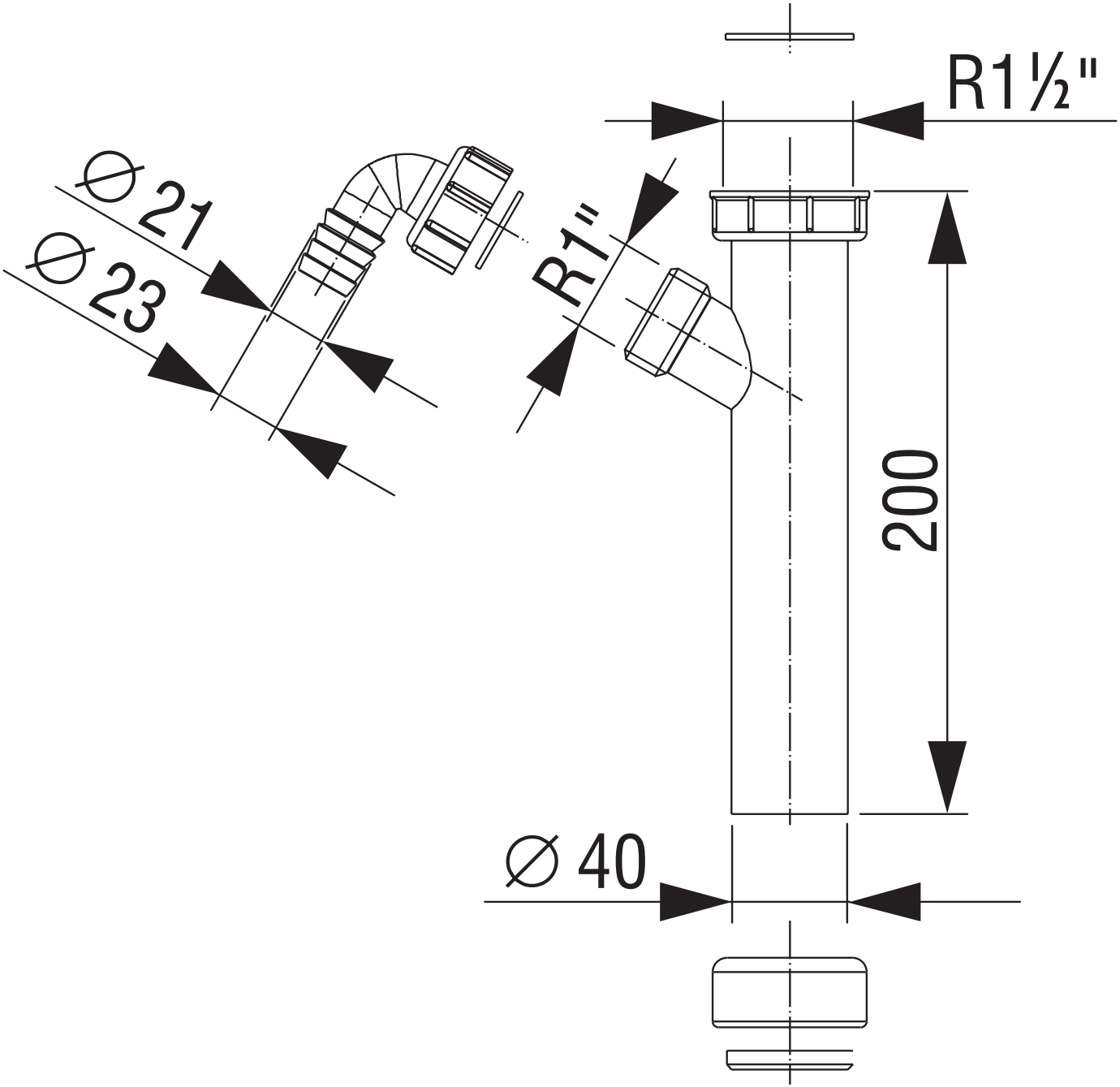
R1½"
∅21
∅23
R1"
200
∅40