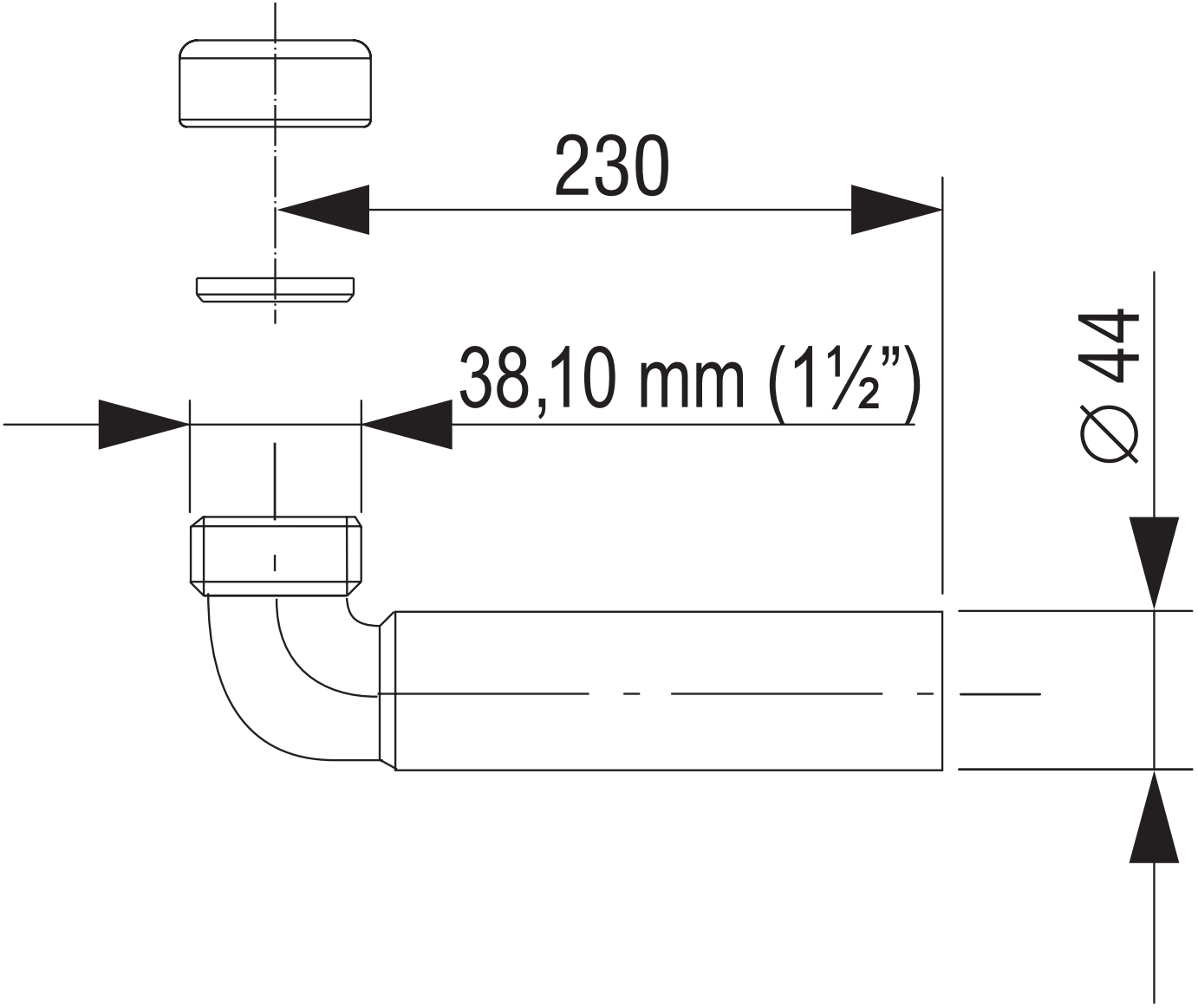
230
38,10 mm (1½”)
∅ 44